R91 - Régulateur de pression, léger, compact, certifié FDA
Compatible air, eau alimentaire, équipement médical de dialyse

Description	Diaphragm miniature pressure regulator of small and lightweight design. All fluid-contact parts of R91-..K are approved by the FDA.		
Application area	food industry and water circulation, e.g. for dialysis devices		
Media	compressed air, non-corrosive gases, deionized water or other liquids.		
Supply pressure	max. 10 bar	**Adjustment**	by plastic knob with snap-lock
Relieving function	non-relieving for drinking water (FDA), relieving for compressed air		
Gauge port	G⅛ on both sides of the body	**Mounting postion**	any
Temperature range	0 °C to 60 °C / 32 °F to 140 °F		
Material for		**drinking water**	**compressed air**
	Body:	acetal	acetal
	Elastomer:	acetal and nylon-reinforced nitrile NBR/Buna-N	acetal and nylon-reinforced nitrile not FDA-approved
	Valve and o-ring:	stainless steel and EPDM, FDA-approved	brass, nitrile and NBR/Buna-N

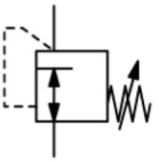

G¼, FDA
compressed air or liquids

Dimensions A mm	B mm	C mm	Flow rate water l/min*1	air l/min*1	Connection thread G	Pressure range bar	Order number
Press. regulator w. FDA approval for drinking water						P_1: max. 10 bar, EPDM non-relieving	**R91-K**
42	76	11	6	380	G¼	0.1 ...3.5	**R91-02BK**
						0.1 ...8.5	**R91-02CK**
Press. regulator for compressed air						P_1: max. 10 bar, NBR/Buna-N relieving	**R91**
42	76	11		380	G¼	0.1 ...3.5	**R91-02B**
						0.1 ...8.5	**R91-02C**

R91

Special options, add the appropriate letter

NPT	connection thread	R91-02 . **N**

Accessories, enclosed

pressure gauge	Ø 40 mm, G⅛	0... 4 bar	**MA4001-04**
		0...10 bar	**MA5002-10**
mounting bracket	made of steel		**BW30-02**
mounting nut	made of plastic		**M30x1,5K**
	made of aluminium		**M30x1,5A**

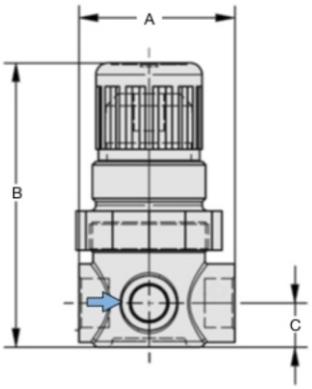

R91

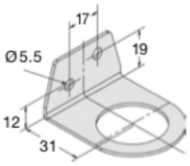

BW30-02

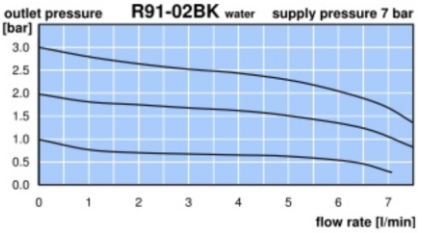

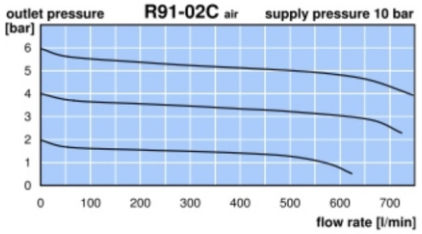

*1 supply pressure 1 bar above outlet pressure

ALPHA AUTOMATISMES

ALPHA AUTOMATISMES Sarl
7, rue des Bouchers - 14400 BAYEUX - FRANCE
email : ventes@alpha-automatismes.com - Tél : 02 31 21 07 85
www.alpha-automatismes.com