PQ2 - Détendeur de pression proportionnel, commande 0/10V ou 4/20mA, à double boucle, précis à 0.2%, pour air comprimé et gaz non corrosif

Technical features

• **Pressure range**	0…10 mbar up to 0…35 bar	• **Linearity**	± 0.15% FS
• **Input signal**	0…10 V and 4…20 mA	• **Hysteresis**	± 0.15% FS
• **Security**	constant outlet pressure at voltage drop	• **Response sensitivity**	< 0.1% FS
• **Response time**	10 to 15 ms	• **Repeatability**	± 0.02% FS
• **Adjustment**	zero point and span	• **Protection class**	IP 65
• **Sensitivity**	immune to shock and vibration up to 25 g	• **Air consumption**	without constant bleed

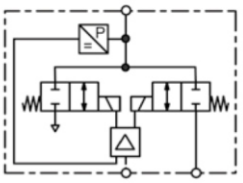

accurate to 0.2%

General technical features

Description Two solenoid valves control the system pressure. One valve is for inlet control, the other for outlet control. A strain gauge pressure transducer measures system pressure and provides a feedback signal to the electronic controls. Any difference between command and feedback signals causes one of the solenoid valves to open, causing system pressure to increase or decrease.

Mounting position any, immune to shock and vibration up to 25 g

Protection class IP 65 housing

Temperature range -5 °C to 70 °C / 23 °F to 158 °F

Material Body: aluminium; Elastomer: FKM; Transducer: aluminium and silicon; Valves: nickel-plated brass

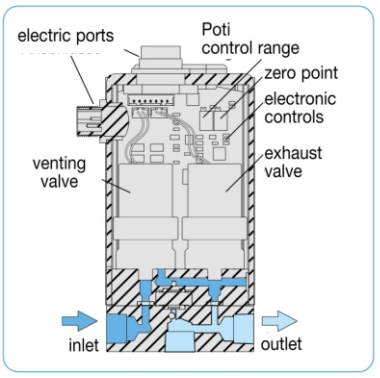

cross-section PQ

Pneumatic features

Media dry, unlubricated and 5 µm filtered compressed air or non-corrosive gases

Supply pressure see chart, minimum 10% above outlet pressure

Flow rate 35 l/min at 7 bar supply pressure and open outlet, optionally 100 l/min
3 l/min at controlled outlet pressure

Exhaust same nominal size as on inlet valve, thus same relief capacity

Air consumption without constant bleed, Option X58: < 2 l/min

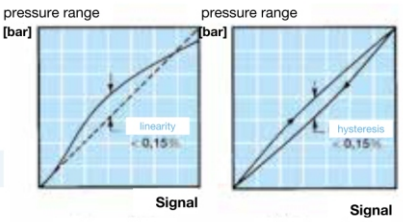

linearity **hysteresis**

Electrical features

Supply voltage 15 … 24 V DC, reverse voltage protection existing

Power consumption 3.6 W for regulation, 0.5 W non-regulating

Signal range 0 … 10 V, optionally 4 … 20 mA

Impedance 4.7 kΩ at voltage signal, 100 Ω at current signal
10 kΩ at voltage signal, 100 Ω at current signal, for external feedback

Monitor signal impedance > 4.7 kΩ at voltage signal, <100 Ω at current signal

Electrical connector plug M16x0.75, 7-pin, with coupling socket

Monitor signal 0 … 10 V, optionally 4 … 20 mA

Security constant outlet pressure at voltage drop

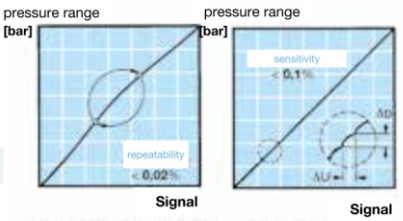

repeatability **sensitivity**

Accuracy

Linearity / Hysteresis ± 0.15% FS

Response sensitivity < 0.1% FS

Response time 10 to 15 ms

Repeatability ± 0.02% FS

Temperature influence < 0.01% FS per °C/K at 0 °C to 50 °C / 32 °F to 122 °F
< 1.00% FS per °C/K at 50 °C to 70 °C / 122 °F to 158 °F

Accuracy over all ± 0.2 % FS

Regulating time < 2 s to fill 0.1 l volume to 90% of the initial pressure (or to exhaust)
< 40 s to fill 2 l volume to 90% of the initial pressure (< 80 s to exhaust)

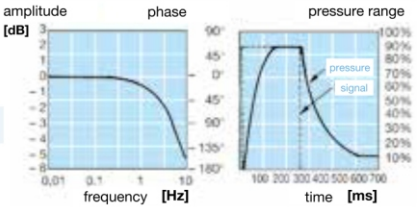

dynamics **regulating time**

Adjustment

Zero point The zero point can be increased by up to 20% of full scale, e.g. from 0 bar to 1.2 bar at a 6 bar regulator. External adjustment via potentiometer Z "zero".

Span The maximum pressure value of the control range can be reduced by up to 20% depending on the selected pressure range, e.g. from 6 to 4.8 bar. External adjustment via potentiometer S "span".

*[1] at 7 bar supply pressure and 3 bar outlet pressure

ALPHA AUTOMATISMES
ALPHA AUTOMATISMES Sarl
7, rue des Bouchers - 14400 BAYEUX - FRANCE
email : ventes@alpha-automatismes.com - Tél : 02 31 21 07 85
www.alpha-automatismes.com

PQ2 - Détendeur de pression proportionnel, commande 0/10V ou 4/20mA, à double boucle, précis à 0.2%, pour air comprimé et gaz non corrosif

Description
The pneumatic proportional pressure regulator produces outlet pressure in proportion to an electrical command input signal. It comprises a complete closed loop servo system consisting of valves, manifold, housing and electronic controls.

Double loop
The servo valve expands in single loop operation by combining an additional feedback from an external sensing device with the internal transducer. The external sensor provides information on the control status. The PQ2 then compares the command signal with the second loop feedback signal.

Should there be a difference in the signal comparisons, the servo valve will make adjustments to the internal loop to bring the system into balance. This provides accurate final outlet. The acceptance of electrical feedback from an external sensor enables precise control of conditions such as pressure, force, torque, position or flow.

External pressure transducer
Any pressure transducer for 0-10 V and 4-20 mA output signal and suitable for 15-24V DC supply voltage can be applied. An appropriate coupling socket plus cable is required.

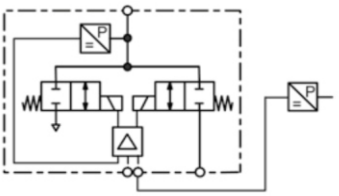

G⅛
0 … 10 mbar/35 bar

Dimensions A mm	B mm	C mm	Flow rate l/min*1	Supply pressure max. mbar/bar*2	Accuracy %	Connection thread G	Pressure range mbar/bar	Order number
Double loop regulator				0 … 10 V input / feedback / second loop signal, supply voltage 24 V DC, 35 l/min*1, with both coupling sockets				**PQ2**
51	106	8	on request	10 mbar	0.2	G⅛	0 … 5 mbar	**PQ2EE-A5**
				20 mbar			0 … 10 mbar	**PQ2EE-B1**
				40 mbar			0 … 20 mbar	**PQ2EE-B2**
				100 mbar			0 … 50 mbar	**PQ2EE-B5**
				200 mbar			0 … 100 mbar	**PQ2EE-C1**
				400 mbar			0 … 200 mbar	**PQ2EE-C2**
				800 mbar			0 … 400 mbar	**PQ2EE-C4**
				1 000 mbar			0 … 600 mbar	**PQ2EE-C6**
51	106	8	35	2 bar	0.2	G⅛	0 … 1 bar	**PQ2EE-01**
				3 bar			0 … 2 bar	**PQ2EE-02**
				7 bar			0 … 4 bar	**PQ2EE-04**
				7 bar			0 … 6 bar	**PQ2EE-06**
				9 bar			0 … 8 bar	**PQ2EE-08**
				15 bar			0 … 10 bar	**PQ2EE-10**
				15 bar			0 … 12 bar	**PQ2EE-12**
				24 bar			0 … 16 bar	**PQ2EE-16**
				24 bar			0 … 20 bar	**PQ2EE-20**
				38 bar			0 … 25 bar	**PQ2EE-25**
				38 bar			0 … 30 bar	**PQ2EE-30**
				38 bar			0 … 35 bar	**PQ2EE-35**
51	106	8	35	0 bar	0.2	G⅛	0 … -1 bar	**PQ2EE-V0**
				2 bar			-1 … +1 bar	**PQ2EE-V1**

PQ2

combination example:
booster with proportional pressure regulator and second loop via pressure transducer

Special options, add the appropriate letter or number

4-20 mA	input / feedback / second loop signal	PQ2 **IC**- . .
flow 100 l/min	increased flow rate, max. 10 bar	PQ2 . . - . . **HF**
continuous regulation*3	improved characteristic curve through proportional inlet valve, max. 10 bar	PQ2 . . - . . **X58**
declining curve	inverted outlet	PQ2 . . - . . **X59**

Accessories, enclosed

coupling socket	M16 x 0.75,	7-pin with 2.0 m cable,	supply and signal,	straight	**PRK-A2L**
				angular	**PRK-C2L**
coupling socket	½″ UNF,	3-pin with 0.9 m cable,	for second loop,	straight	**PQH-L1**
				angular	**PQH-L2**
mounting bracket	made of steel				**PQKT-01**

PRK-A **PRK-C**

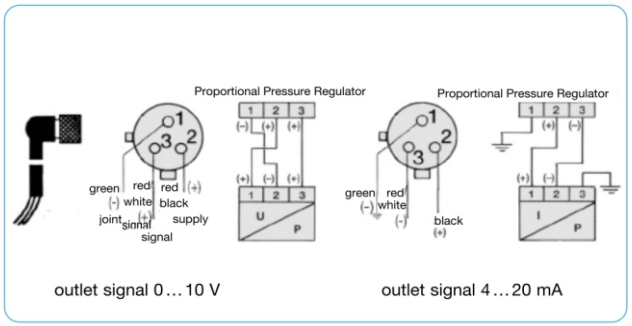

connection diagram for second electrical loop

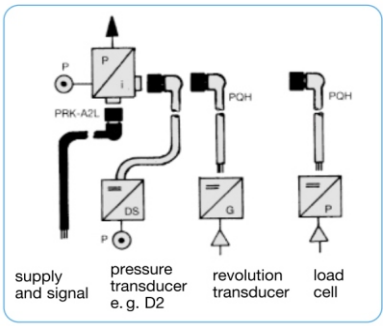

PQ2 with second loop

*1 at 7 bar supply pressure and open outlet, at regulated flow rate of 3 l/min
*2 higher supply pressures on request
*3 air consumption

ALPHA AUTOMATISMES

ALPHA AUTOMATISMES Sarl
7, rue des Bouchers - 14400 BAYEUX - FRANCE
email : ventes@alpha-automatismes.com - Tél : 02 31 21 07 85
www.alpha-automatismes.com